MATERIAL SPECIFICATIONS

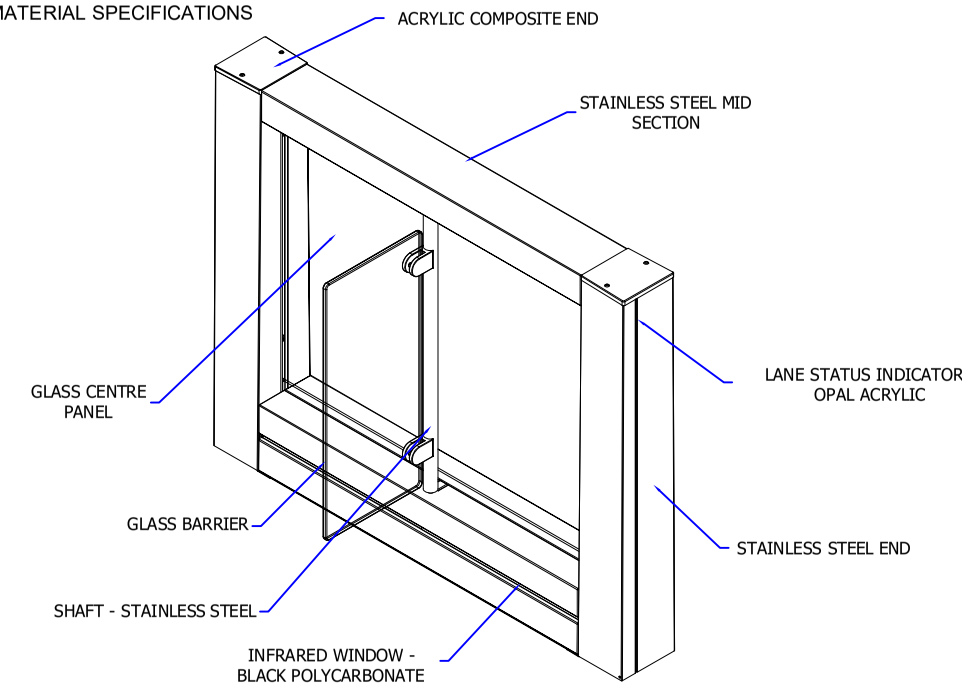

ALL GLASS IS TOUGHENED - EN12150 / ANSI Z97.1
ALL STAINLESS STEEL IS 304, 240 GRIT (SATIN No. 4)
HORIZONTAL GRAIN

LANE LAYOUT & GENERAL DIMENSIONS

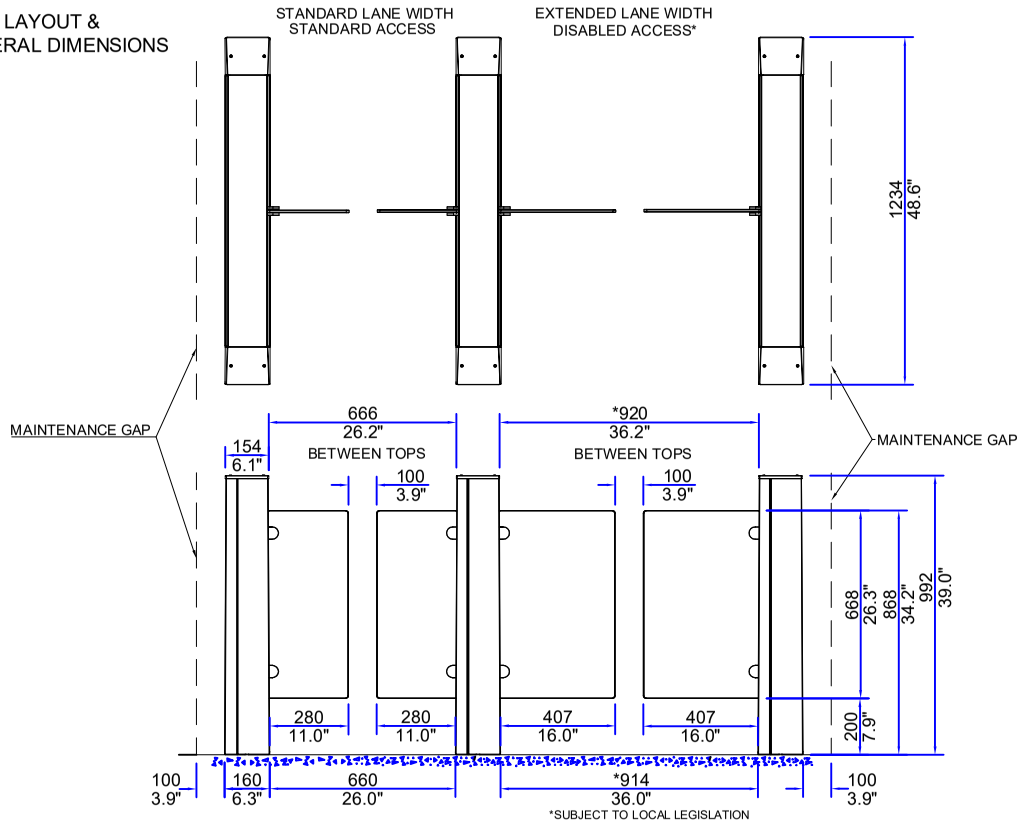

READER MOUNTING OPTIONS AND LOGO DETAILS

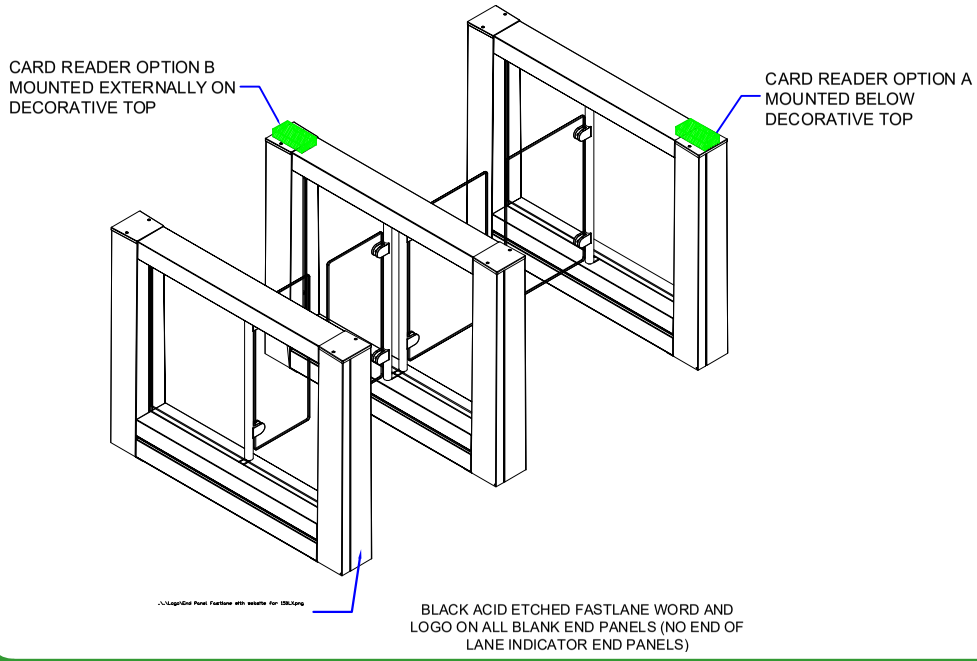

PEDESTAL FOOTPRINT

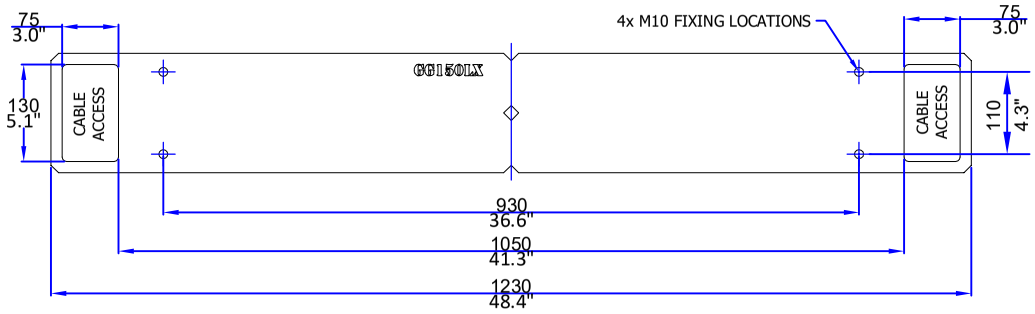

PRODUCT: GLASSGATE 150LX

TITLE: GENERAL INFORMATION

DRAWING No: GG150LX_A1

FOR SALES INFORMATION ONLY-SUBJECT TO CHANGE
ALL DIMENSIONS +/- 2MM

This document is the copyright of Integrated Design Ltd

F

fastlane