MATERIAL SPECIFICATIONS

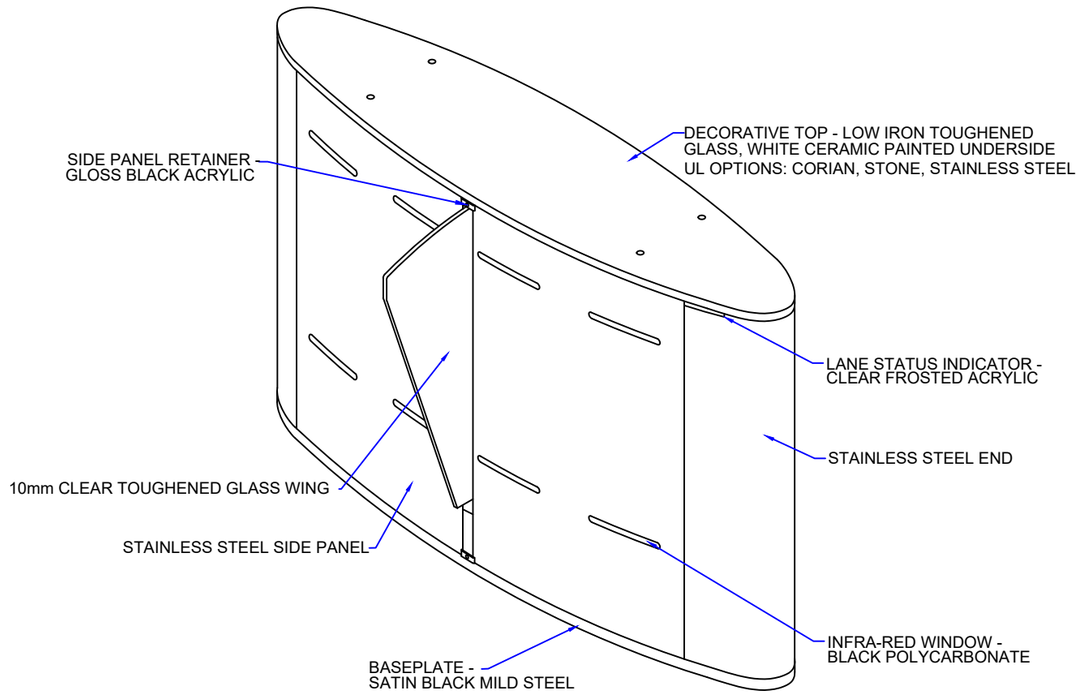

ALL GLASS IS TOUGHENED - EN12150 / ANSI Z97.1
ALL STAINLESS STEEL IS 304, 240 GRIT (SATIN No. 4), HORIZONTAL GRAIN

LANE LAYOUT & GENERAL DIMENSIONS

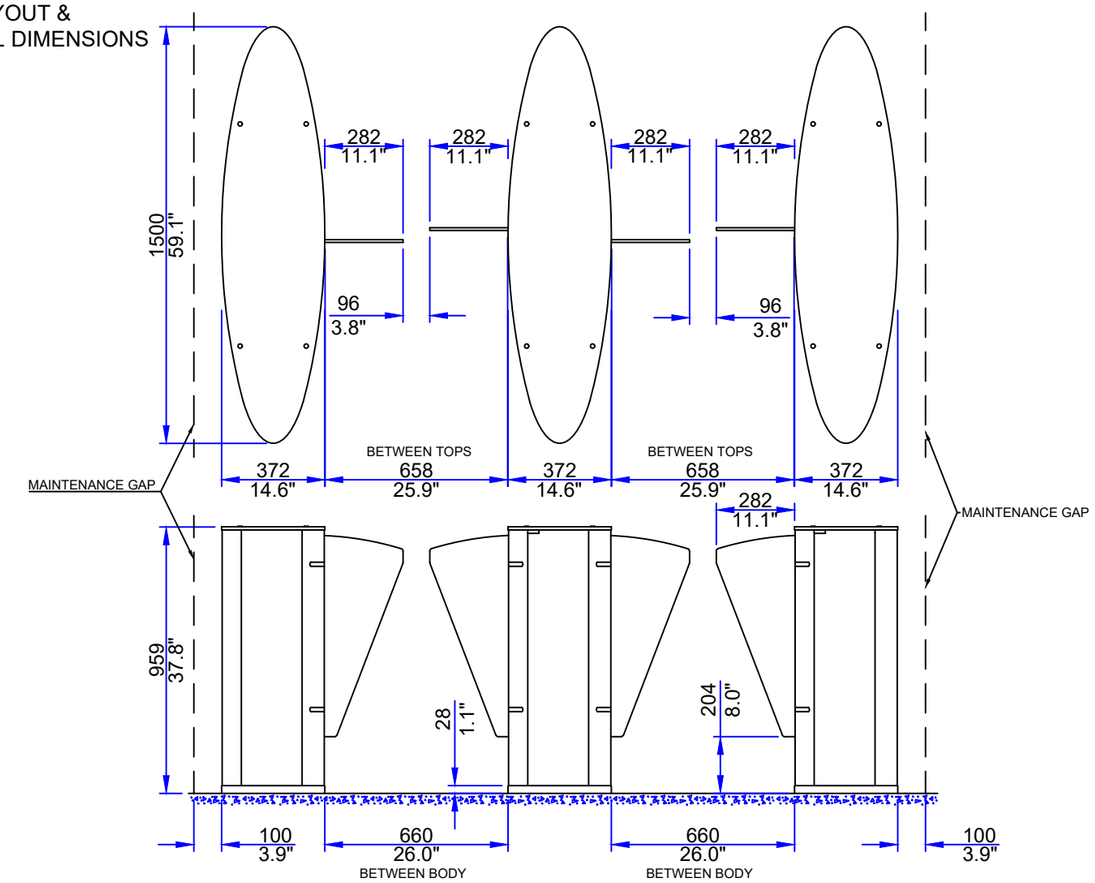

READER MOUNTING OPTIONS AND LOGO DETAILS

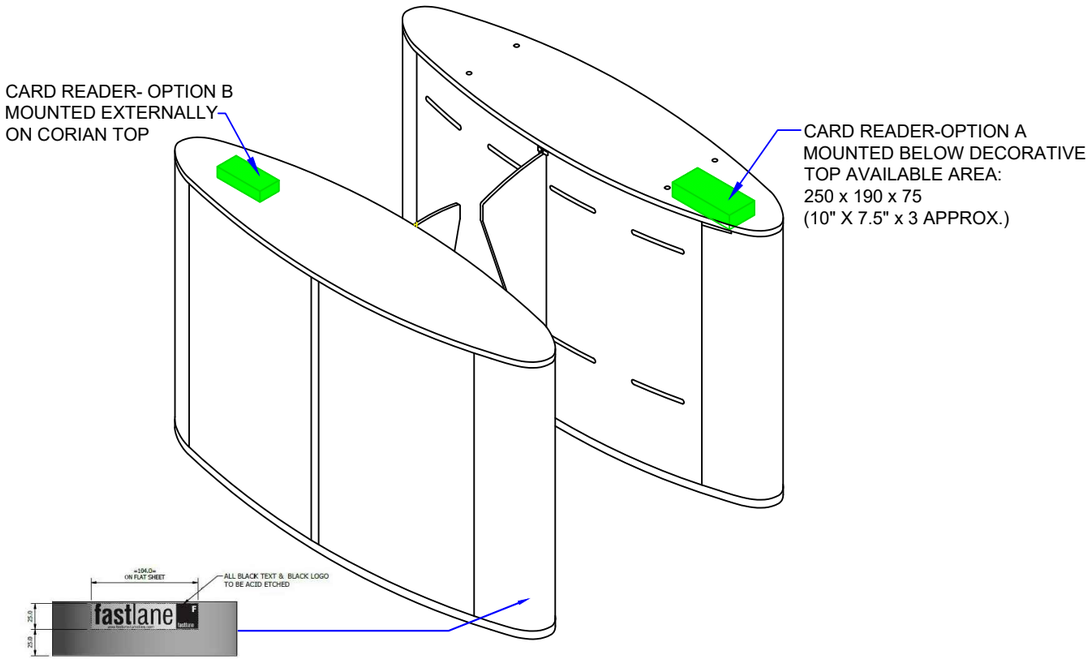

BLACK ACID ETCHED FASTLANE WORD AND LOGO ON ALL BLANK END PANELS (NO END OF LANE INDICATOR END PANELS)

PEDESTAL FOOTPRINT

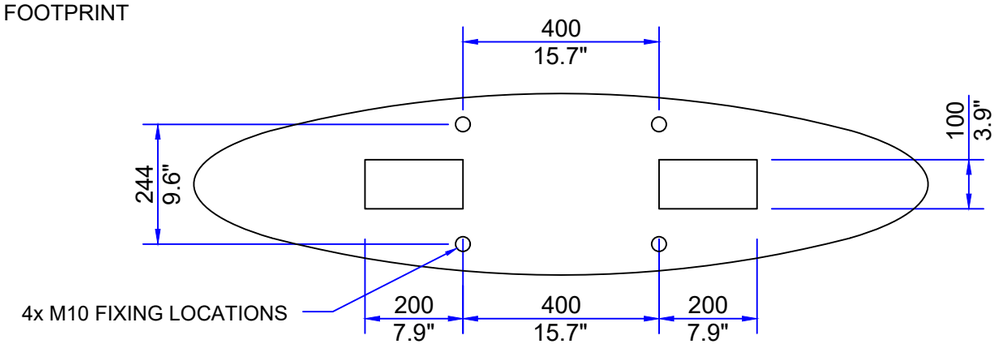

PRODUCT: GLASSWING STANDARD
TITLE: GENERAL INFORMATION

DRAWING No: GWSTD_A5

FOR SALES INFORMATION ONLY-SUBJECT TO CHANGE
ALL DIMENSIONS +/-2mm

This document is the copyright of Integrated Design LTD

fastlane